ShenZhen Frecom Electronic Co., LTD
深圳市福瑞康电子有限公司

APPROVAL SHEET

RoHS

SPECIFICATIONS
SWITCHING POWER SUPPLY

CUSTOMER.:	F0390	P/N:	
DESIGN NO.:	01130285300R	REV.	01
MODEL NO.:	F05L5-050100SPAE	TYPE:	CB
OUTPUT:	5V/1A		

Authorized Signature		

深圳市福瑞康电子有限公司
ShenZhen Frecom Electronic Co., LTD
ADDERSS: Frecom Bld,FuChuan Technology Zone TongFuYu Industry
GuangMing,District ShenZhen,P.R.China
Telephone: (86)-755-29530776 Fax : (86)-755-29530005

Approve By	Check By	Prepared By

Table of Contents

1.0 SCOPE 5

1.1 Description 5

2.0 INPUT REQUIREMENTS 5

2.1 Input Voltage & Frequency 5
2.2 Input Current 5
2.3 Inrush Current 5
2.4 Power Consumption 5

3.0 OUTPUT FEATURES 5

3.1 Static Load 5
3.2 Capacitive Load Test 6
3.3 Output Over Current 6
3.4 Turn On Delay 6
3.5 Hold Up Time 6
3.6 Fall Time 6
3.7 Rise Time 6
3.8 Typical Efficiency 6
3.9 Output Transient Response 6

4.0 PROTECTION REQUIREMENT 7

4.1 Over Voltage Protection 7
4.2 Over Current & Short Circuit Protection 7

5.0 ENVIRONMENTAL CONDITIONS 7

5.1 Operating 7
5.2 Non - Operating 7

6.0 RELIABILITY AND QUALITY CONTROL 8

6.1 MTBF 8
6.2 Operating Life 8

6.3 Burn-In....8
6.4 Case Temp. Rise....8

7.0 INTERNATIONAL STANDARDS....8

7.1 EMI Standards....8
7.2 EMS Standards....8

8.0 MECHANICAL CHARACTERISTICS....9

8.1 Physical Dimensions....9
8.2 Label....9
8.3 Connector Type....9
8.4 Output Connector Assignment....10
DC output Pin assignment....10
8.5 Packing....10
8.6 Drop Test....10
8.7 Swing Test....10
8.8 Weight....10

9.0 SAFETY....10

9.1 Safety Standard....10
9.2 Insulation Resistance....10
9.3 Dielectric Strength (Hi-Pot)....11
9.4 Leakage Current....11

10.0 GREEN REQUIREMENTS....11

10.1 Hazardous Substances....11
10.2 Energy Efficiency....11

11.0 MECHANICAL DRAWING....13

12.0 SCHEMATIC....17

13.0 PCB LAYOUT DRAWING....18

Change Notes

Ver	Item	Before	After	Revised By	Approved By	Finish date	Remark
01	1	New Issue	New Issue			15.11.05	

1.0 SCOPE

This document details the electrical, mechanical and environmental specifications of a switching power supply.

1.1 Description

■ Wall Mount ☐ Desk-Top ☐ Open Frame ☐ Others

2.0 INPUT REQUIREMENTS

2.1 Input Voltage & Frequency

The range of input voltage is from **90Vac** to **264Vac**
Minimum input voltage **90Vac** with 57-63Hz
Maximum input voltage **264Vac** with 47-53Hz.
Normal input voltage **100Vac** & **240Vac** with 50/60Hz

2.2 Input Current

The maximum input current is max **0.2A** at **100～240Vac** .

2.3 Inrush Current

The inrush current will not exceed **30A** at **100Vac and 40A** at **240Vac** input and Max load for a cold start at 25℃.

2.4 Power Consumption

The input power should be less than **100mW** with output **0A** at 115Vac/230Vac input.

3.0 OUTPUT FEATURES

3.1 Static Load

3.1.1	Output #	V1			
3.1.2	Output Voltage:	**5V**			
3.1.3	Minimum Load:	**0A**			
3.1.4	Maximum Load:	**1A**			
3.1.5	Output Power	**5W**			
3.1.6	Load Regulation:	**±5%**			
3.1.7	Line Regulation:	**±3%**			
3.1.8	Voltage Accuracy:	**Min**	**4.75V**		
		Max	**5.25V**		
3.1.9	Ripple & Noise(*)	120mVp-p			

*Measuring is done by 20MHz bandwidth oscilloscope and terminated each output with a 47uF aluminum electrolytic capacitor and a 0.1uF ceramic capacitor.

3.2 Capacitive Load Test

Output rise waveform should be smooth and no drop out be observed @ Load = 5R & C=1000uF at 100Vac/240Vac.

3.3 Output Over Current

In the input voltage range the over current range Iocp: 1.2～2.0A.

3.4 Turn On Delay

During turn on and turn off, no output voltage shall exceed its nominal voltage by more than 5% and no output shall change its polarity with respect to its return line. All outputs shall reach their steady state values within 3 seconds of turn on at 100～240Vac input

3.5 Hold Up Time

10mS minimum from loss of 100Vac/60Hz input at maximum load , and 20mS minimum at 240Vac/50Hz input at maximum load.

3.6 Fall Time

30mS maximum at 100～240Vac input at maximum load.

3.7 Rise Time

60mS maximum at 100～240Vac input at maximum load.

3.8 Typical Efficiency

The efficiency (watts out / watts in) shall be higher than / % Typically while measuring at nominal line and maximum load, test in 1 minute after power on.

3.9 Output Transient Response

3.9.1 Transient Response Deviation:

The power supply shall maintain output transient response time within 10mS With a current change from 25% to 50% or 50% to 75%of maximum current and 0.5A/uS slew rate in load for the output 10%.

3.9.2 Transient Response Recovery Time:

200uS maximum @ 25% to 50% or 50% to 75% Load & 50% Duty & 100Hz/200Hz.

3.9.3 Transient Response Over Shoot:±10%Vo.

4.0 PROTECTION REQUIREMENT

4.1 Over Voltage Protection

The power supply shall be hiccupped when output voltage reaches to its over – voltage protection trigger point **8.5V Max**

■ The power supply shall be self – recovering when the fault condition is removed.

☐ The power supply will go into latch-off mode, and have to OFF and ON the AC input to restart the power supply.

4.2 Over Current & Short Circuit Protection

The power supply shall be hiccupped when operating any output in overload condition, or when operating any output in a short circuit condition.

☐ The power supply shall fail but safe – the input power shall be less than / W.

■ The power supply shall be self – recovering when the fault condition is removed.

☐ The power supply will go into latch-off mode, and have to OFF and ON the AC input to restart the power supply.

5.0 ENVIRONMENTAL CONDITIONS

5.1 Operating

The power supply shall be capable of operating normally in any mode without malfunction happens in the following environmental conditions.

5.1.1 Operating Temperature: 0℃～40℃

5.1.2 Relative Humidity: 20%～95%

5.1.3 Atmospheric Pressure: 70Kpa～106Kpa

5.1.4 Altitude: Sea level to **5000m**

5.1.5 Vibration: 1.0G(Amplitude), 5～20～500Hz(Frequency), 30 minutes per cycle for each axis (X, Y, Z).

5.1.6 Cooling: Natural convection cooling

5.2 Non - Operating

The power supply shall be capable of withstanding the following environmental conditions extended periods of time, without sustaining electrical or mechanical damage and subsequent operational deficiencies.

5.2.1 Storage Temperature: -20℃～70℃

5.2.2 Relative Humidity: 20%～95%

5.2.3 Atmospheric Pressure: 70Kpa～106Kpa

5.2.4 Altitude: Sea level to **5000m**

5.2.5 Vibration and Shock: The power supply shall be designed to withstand normal transportation vibration per MIL–STD-810D, method 514 and procedures X, as it is mounted in the chassis assembly and packed for shipping.

5.2.6 Thermal Shock: +85°C for 1 hour; Low: -40°C for 1 hour,no work, after repeat for 32 times, normal temperature for 2 hours,the appearance and functions must meet the requirements in ambient temperature.

6.0 RELIABILITY AND QUALITY CONTROL

6.1 MTBF

When the power supply is operating within the limits of this specification the MTBF shall be at least **50,000** hours at 40℃.

6.2 Operating Life

Output voltage	Min Voltage	Max Voltage	Current Max	Life Time	Ambient Temperature	Load Condition
5V	4.75V	5.25V	1A	26280 Hours	25℃	100%

6.3 Burn-In

The power supply shall withstand a minimum of 4 hours Burn-In test 80%-100% load at 40℃±5℃ room temperatures, after test, product shall operate normally.

6.4 Case Temp. Rise

45K maximum @ 100～240Vac & 80% Load

7.0 INTERNATIONAL STANDARDS

7.1 EMI Standards

The power supply shall meet the radiated and conducted emission requirements for **EN55022**.

7.2 EMS Standards

The power supply shall meet the following EMS standards

7.2.1 EN61000-4-2 Electrostatic Discharge (ESD)

Static – discharge test by contact or air should be conducted with Static – discharge teeter, energy storage capacitance of 150pF, and discharge resistance of 330Ω. **±8.0KV** air discharge, **±4.0KV** contact discharge, Performance Criterion B.

7.2.2 EN61000-4-3 Radiated electromagnetic field(RS)

Radio- frequency Electromagnetic

Field Susceptibility Test, RS, 80-1000MHz,3V/m, 80%AM(1KHz), Performance Criterion A

7.2.3 EN61000-4-4 Electrical Fast Transient / Burst (EFT)

Power Line to Line: **±1KV**

Performance Criterion B.

7.2.4 ■ EN61000-4-5 Lightning Surge Attachment

☐ Other Standards: **ITU K.21**

Lightning Surge voltage of differential and common modes shall be applied across AC input lines and across input and frame ground.

Power Line to Line: **±2.5KV**

Line to Ground : **±4.0KV**

Performance Criterion B.

7.2.5 EN61000-4-6 Conducted Radio Frequency Disturbances (CS)

Conducted Radio Frequency Disturbances Test, CS, 0.15-80 MHz, 3V/m, 80%AM, 1KHz, Performance Criterion A.

7.2.6 EN61000-4-11 Voltage Dips/Short Interruption/Variations Voltage Dips, 30% reduction- 10ms, Performance Criterion B, 60% Reduction – 100ms, Performance Criterion C, Voltage Interruptions>95% Reduction- 5000ms, Performance Criterion C.

8.0 MECHANICAL CHARACTERISTICS

8.1 Physical Dimensions

The detail dimension of the power supply, please see attachment.

L52*W25*H52mm

8.2 Label

The label of the power supply, please see attachment.

L34*W14mm

8.3 Connector Type

AC INPUT：**Brazil 2PIN**

DC OUTPUT：**UL2468 24AWG 1500±30mm PLUG:5.5*2.1*10mm L TYPE**

8.4 Output Connector Assignment

DC output Pin assignment

8.5 Packing

The packing of the power supply,please see attachment.

L550*W420*H200mm

8.6 Drop Test

1 meter height, fall to hardwood 13mm thickness above, 1 time per side, after test, function and safety is ok.

8.7 Swing Test

1000 times (go and back as 1 time) 120 degree ,with load 200g, 60 times per minute

8.8 Weight

The weight of the power supply shall be **65g (Ref)**

9.0 SAFETY

9.1 Safety Standard

The power supply shall be certified under the following international regulatory standards

Item	Country	Certified	Standard
CB	**Brazil**	**Approved**	**EN 60950-1**

9.2 Insulation Resistance

Primary to Secondary

500VDC 60 second for type test，2 second for production.

>50MΩ(Below at R.H 70%)

>20MΩ(Below at R.H 95%)

（Primary-Secondary ⩾100MΩ @ 500VDC for product line test）

Environmental Reliability Test:

9.3 Dielectric Strength (Hi-Pot)

Primary to Secondary **AC 3000V,10mA** 1 minute for type test, **AC 3600V,10mA** 2 seconds for product.

9.4 Leakage Current

The leakage current shall be less than **0.25mA** for Class II when the power supply is operated maximum input voltage and maximum frequency.

10.0 GREEN REQUIREMENTS

10.1 Hazardous Substances

The components and used materials shall be in compliance with

- ■ Lead free process
- ☐ Halogen free process
- ■ EU Directive 2011/65/EU “RoHS”
- ☐ EU Directive 2002/96/EC “WEEE”
- ☐ REACH

10.2 Energy Efficiency

The No-Load power consumption shall be less than **100mW.**

The Averaged Efficiency shall be more than **73.62%** , at 115V/230VAC input and 100%,75%,50%,25% load for cable end.(After Full load Aging, more than 30 min)

The Minimum Average Efficiency shall be more than **%** , at 115V/230VAC input and 10% load of full rated output Current.(This provision only applies to EU adaptor)

International Efficiency Level Ⅵ.

In order to ensure to meet the CEC, therefore, this content will be 100% recognized for production

This power supply is therefore in compliance with the requirements of

- ☐ California Energy Commission for external power supplies（CEC）.
- ☐ Energy Star requirements for External Power Supplies.
- ■ EU Code of Conduct on external power supplies.
- ☐ Australian and New Zealand Energy Performance Requirements and Marking Requirements for External Power Supplies.
- ☐ China Energy Efficiency requirements for External Power Supplies (GB20943).
- ☐ Korea Regulation on Energy Efficiency Labeling and standards for External Power Supplies.

- ☐ EU Directive for Energy-related Products ErP 2009/125/EC and Implementing Measure (IM) no. EC278/2009 for External Power Supply (ErP) .
- ☐ Canada's Energy Efficiency Regulations-External Power Supplies (icci.Amendment 1 to 12):09.Nov.2011 (NRcan).

附件十三 1

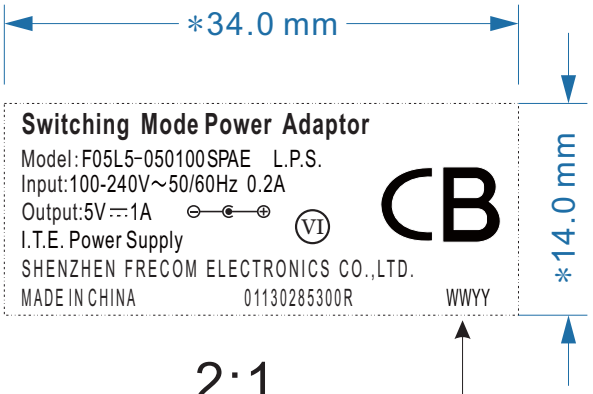

2:1

WW:week
YY:year

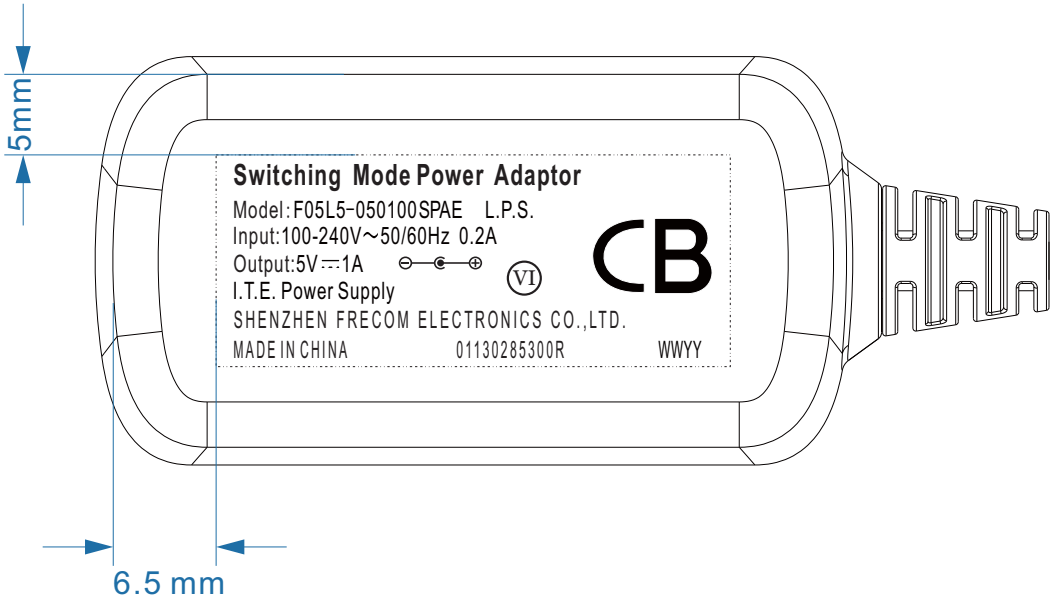

TECHNIQUE REQUEST:
1. Laser
2. Supplementary:Dimensions with "*" are important controlled

注:所有物料均需符合RoHS和REACH要求

版本 REV.	日期 DATE	修订说明 REVISER NOTE	修订者 REVISER

深圳市福瑞康电子有限公司
SHENZHEN FRECOM ELECTRONICS CO.,LTD.

名称 DESCRIPTION	铭牌/Model Label			单 位 UNIT	mm
机型 MODEL	01130285300R			比例 SCALE	2:1
图号DRAW NO		材质 MATERIAL		第三角投影 PROJECTION	
绘制 DRAWED	范利芳 2015.11.04	审核 CHECKED		批准 APPROVED	

未标注尺寸公差
NOT INDICATE SIZE TOLERANCE
>50:±0.30
10 TO 50:±0.20
2 TO 10:±0.10
BELOW 2:±0.05
ANGLE:0.5°

图纸尺寸 DRAW SIZE	A4
版本 REV.	01

WI-RD-028-01

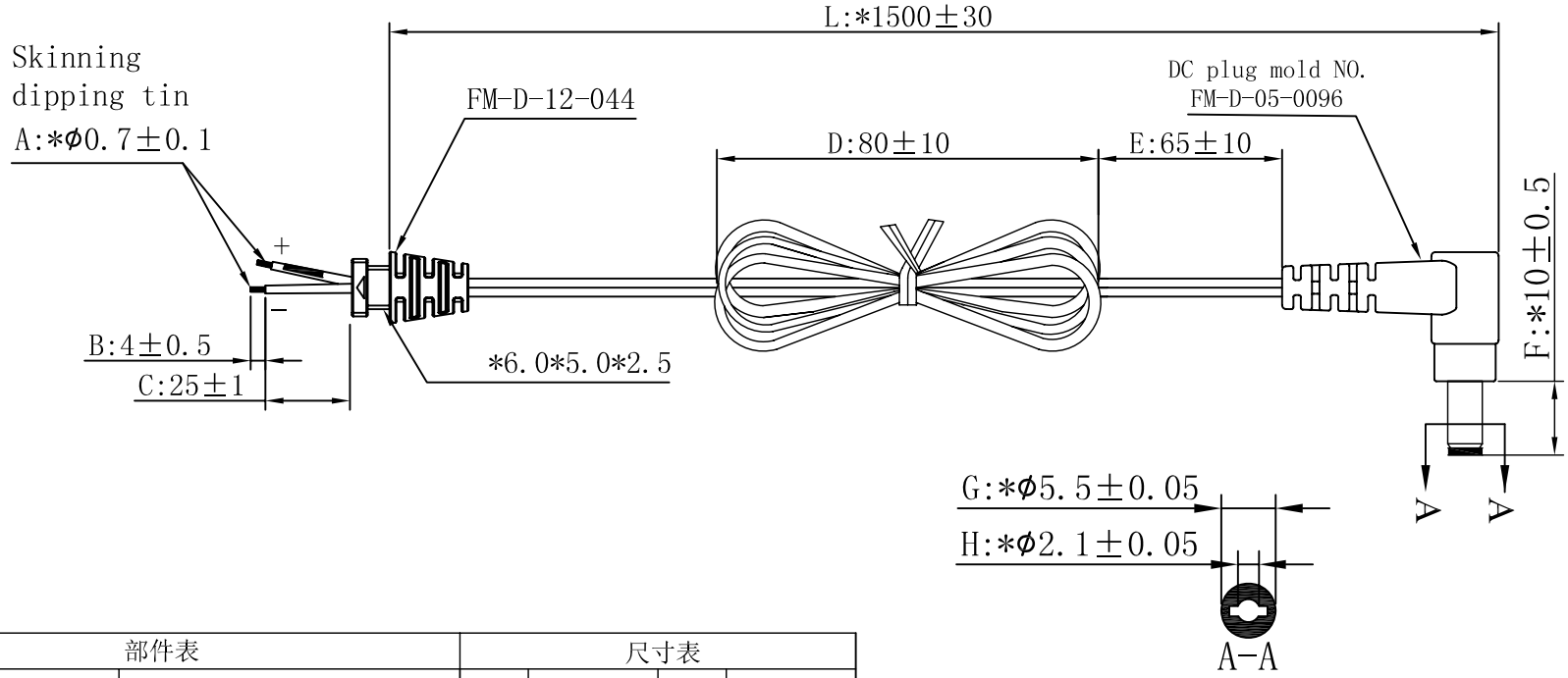

部件表				尺寸表			
NO	名称	图号/模号	规格	位号	尺寸	位号	尺寸
1	SR	FM-D-12-044	6.0*5.0*2.5	A	*0.7±0.1	E	65±10
2	DC模	FM-D-05-0096	配工字网尾	B	4±0.5	F	*10±0.5
3	DC头		5.5*2.1*24.5,音叉式带凹槽 焊线式	C	*25±1.0	G	*5.5±0.05
4	配线		UL2468 24AWG 1.555M	D	80±10	H	*2.1±0.05
5							
裁剪线长度=L+B+C+25(公差值)；焊线长度同SR卡口位相当不计算				L	*1500±30		
注：所有物料均需符合RoHS和REACH要求							

TECHNIQUE REQUEST:
1. DC WIRE UL2468 24AWG
2. Vdeage: DC/300V DC/S, 0.5mA.
3. Bending Condition : 1000 Times Angle ±60° Weight 200g 60Times/minute.
4. PVC Thickness:0.45±0.1mm.
5. CORD: 0.16/11,Parallel Wire
6. Color: BLACK
7. Resistance: single 141.3mΩ MAX.
8. Turning Fork elbow;Groove;Inner"+" Outer"-"
9. DC Part Number: 56100210000R
10. Supplementary:Dimensions with "*" are important controlled

版本 REV.	日期 DATE	修订说明 REVISER NOTE	修订者 REVISER

深圳市福瑞康电子有限公司
SHENZHEN FRECOM ELECTRONICS CO.,LTD.

名称 DESCRIPTION	DC输出线\DC Cord			单 位 UNIT	mm
料号 PART NO	01130285300R			比例 SCALE	1:1
图号DRAW NO		材质 MATERIAL	PVC	第三角投影 PROJECTION	
绘制 DRAWED	范利芳 2015.11.04	审核 CHECKED		批准 APPROVED	

未标注尺寸公差
NOT INDICATE SIZE TOLERANCE
>50:±0.30
10 TO 50:±0.20
2 TO 10:±0.10
BELOW 2:±0.05
ANGLE:0.5°

图纸尺寸 DRAW SIZE: A4
版本 REV.: 01

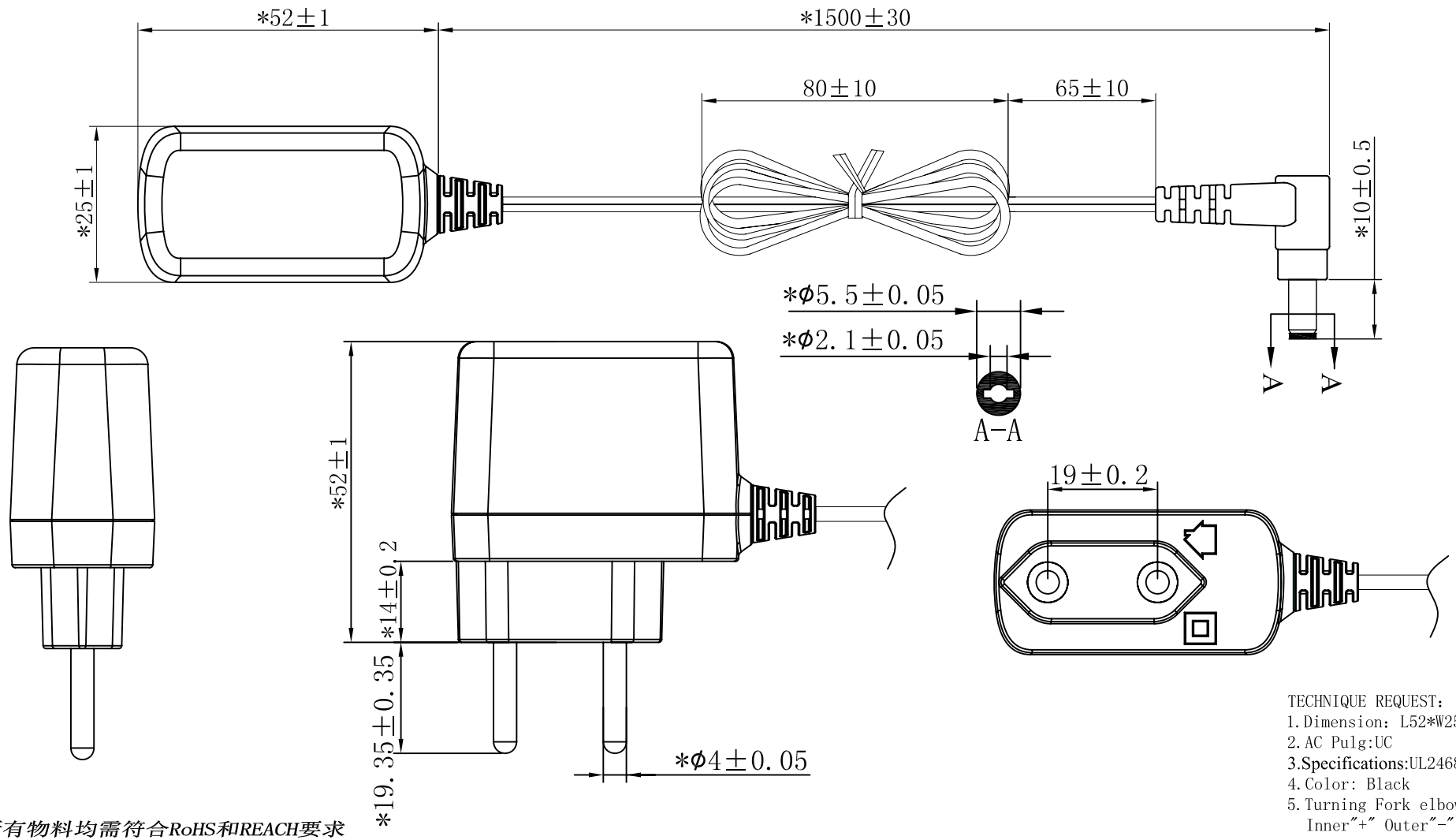

TECHNIQUE REQUEST:
1. Dimension: L52*W25*H52
2. AC Pulg:UC
3. Specifications:UL2468 24AWG
4. Color: Black
5. Turning Fork elbow;Groove;
   Inner"+" Outer"-"

注：所有物料均需符合RoHS和REACH要求

版本 REV.	日期 DATE	修订说明 REVISER NOTE	修订者 REVISER

深圳市福瑞康电子有限公司
SHENZHEN FRECOM ELECTRONICS CO.,LTD.

名称 DESCRIPTION	外观图/Figure			单 位 UNIT	mm
机型 MODEL	F05L5-050100SPAE			比例 SCALE	1:1
图号DRAW NO		材质 MATERIAL	PC	第三角投影 PROJECTION	
绘制 DRAWED	范利芳 2015.11.04	审核 CHECKED		批准 APPROVED	

未标注尺寸公差
NOT INDICATE SIZE TOLERANCE
>50:±0.30
10 TO 50:±0.20
2 TO 10:±0.10
BELOW 2:±0.05
ANGLE:0.5°

图纸尺寸 DRAW SIZE	A4
版本 REV.	01

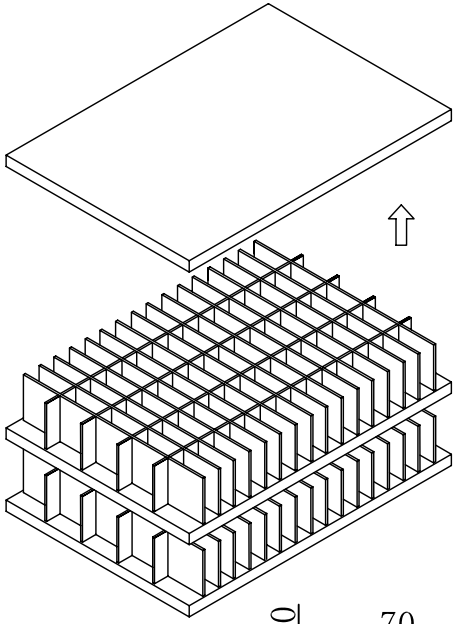

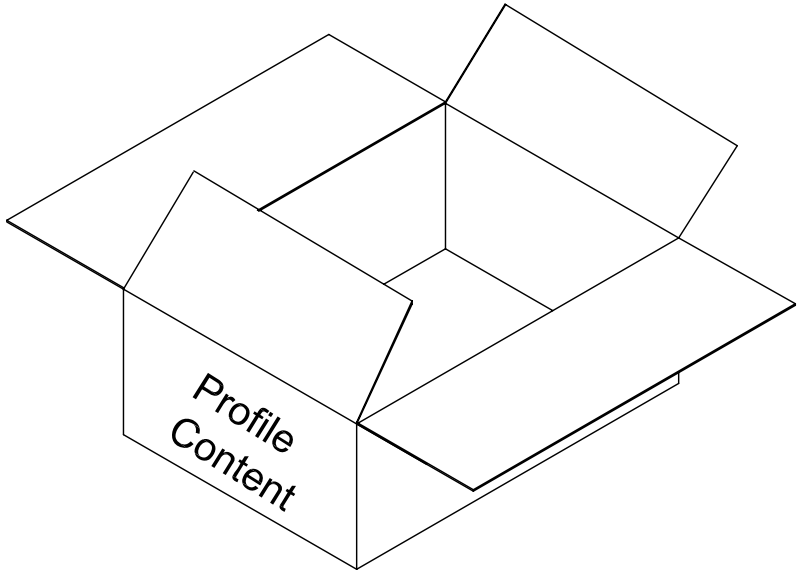

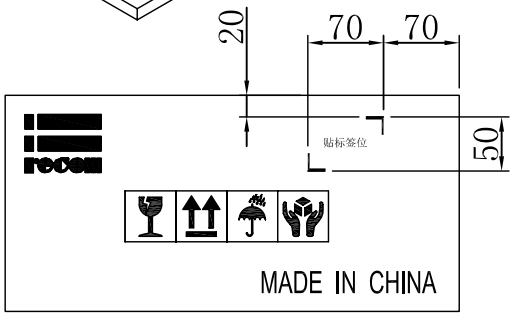

Profile Content

MODEL:		C/NO.:
QT'Y:	PCS	LINE:
G.W.:	Kg	DATE:
MEAS:		

Frontispiece Content

A description of package:
The knife wrapped products into the slot, the slot for each knife put 1PCS, each layer of 75PCS, every box 2 Layer is placed 150PCS: 75PCS/ per layer*2 =150PCS/ box
Two. The bag material description:
Name specifications
1: card (L) 548* (W) 419mm
Material: B3B 3PCS/ box
2 Sixteen partition: 549*90mm margin 18mm
Material: B3B 8PCS/ box
3 Four partition: 419*90mm
Material: B3B 32PCS/ box
4 outside the box (size):
(L) 550* (W) 420* (H) 200mm
Material: A=A 1PCS/ box

注：所有物料均需符合RoHS和REACH要求

Note: No PE bags

版本 REV.	日期 DATE	修订说明 REVISER NOTE	修订者 REVISER

深圳市福瑞康电子有限公司
SHENZHEN FRECOM ELECTRONICS CO.,LTD.

名称 DESCRIPTION	包装图/Packing			单 位 UNIT	mm
机型 MODEL	F05L5			比例 SCALE	FILL
图号DRAW NO		材质 MATERIAL		第三角投影 PROJECTION	
绘制 DRAWED	范利芳 2015.11.04	审核 CHECKED		批准 APPROVED	

未标注尺寸公差
NOT INDICATE SIZE TOLERANCE
>50:±0.30
10 TO 50:±0.20
2 TO 10:±0.10
BELOW 2:±0.05
ANGLE:0.5°

图纸尺寸 DRAW SIZE	A4
版本 REV.	01

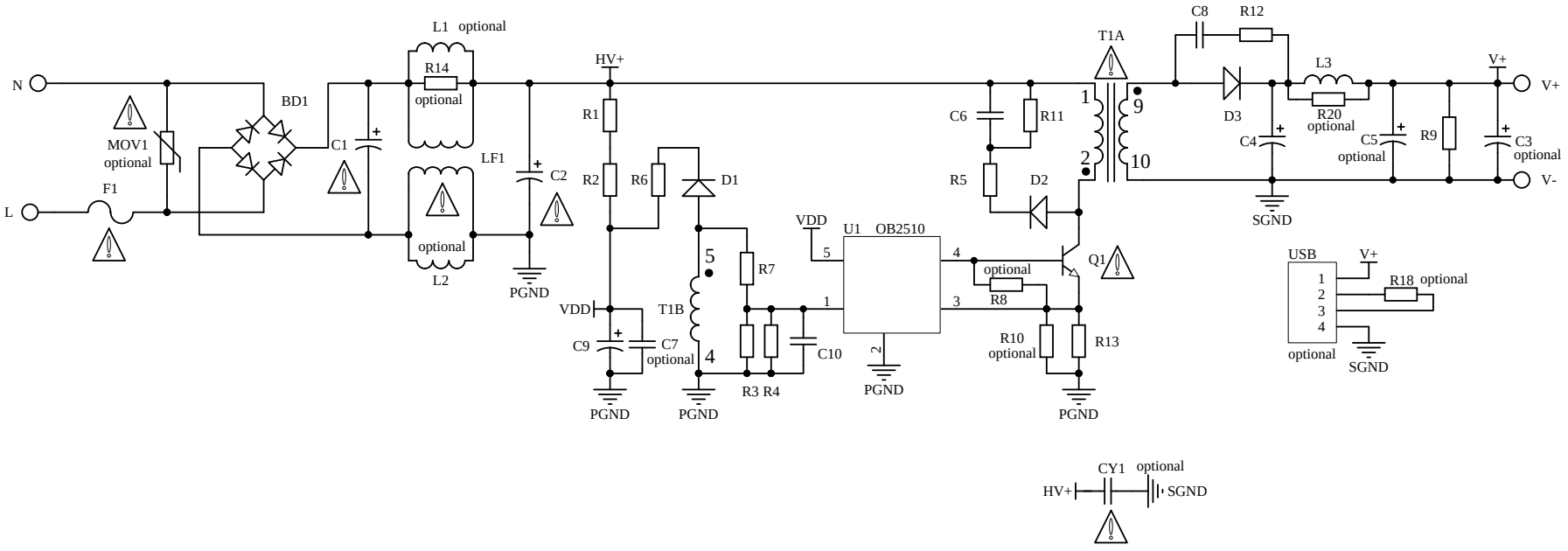

Title	深圳市福瑞康电子有限公司	
Size A4	Number F05L5-XXXYYY	Revision A01
Date: 2015-3-3	Sheet of	
File: D:\PCB资料\..\F05L5-XXXYYY.SchDoc	Drawn By:	

Layer Rev: / Item (REV:)	A01									
Top Overlay 1 - 1										
Botton Overlay 1 - 2										
Botton Layer 1 - 3										
Top Layer 1 - 4										

物料编号:
(PART NO.:)

修改记录(MODIFICATION ANNAL)

New create
2014.06.27

技 术 要 求
TECHNIQUE REQUEST:

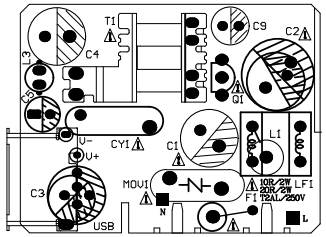

Top Overlay

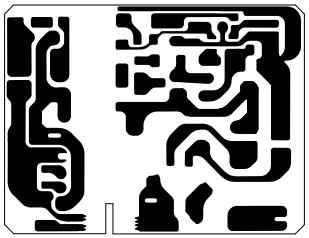

Bottom Layer

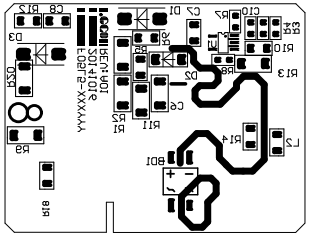

Bottom Overlay

深圳市福瑞康电子有限公司
SHENZHEN FRECOM ELECTRONICS CO.,LTD

机型(MODEL): F05L5-XXXYYY		名称(DESCRIPTION): PCB Artwork	
料号(Part No.):		未标注尺寸公差 NOT INDICATE SIZE TOLERANCE X. ±0.30 X.X ±0.20 X.XX ±0.10 ANGLE 0.5	
材质(MATERIAL)	CEM-1/1.6mm		
比例（PROPRORTIONMENT）			
投影(PROJECTION）		单位/UNITS: mm	A4
绘制（DRAWED）	Kuang weixing		
审核（CHECKED）			
批准（APPROVED）			